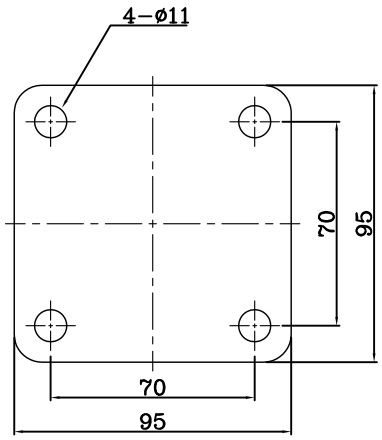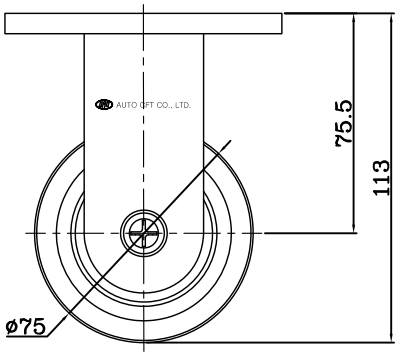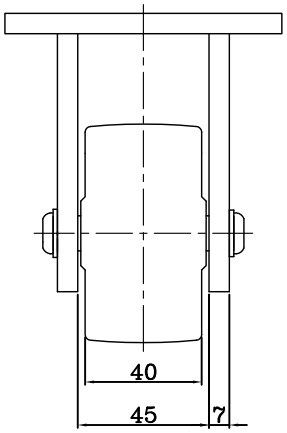ACMU-75RF