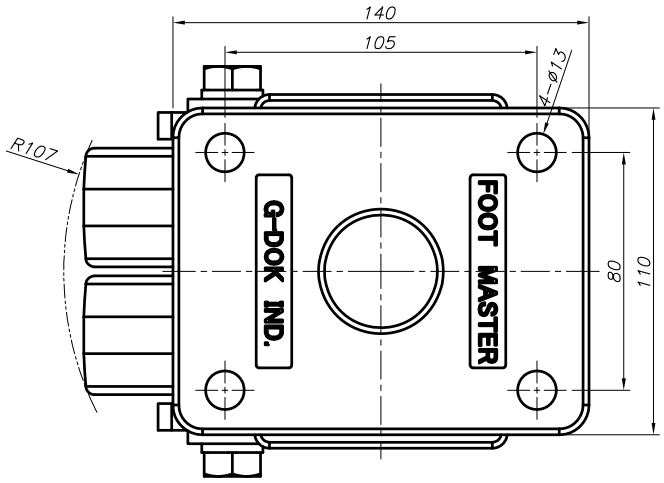

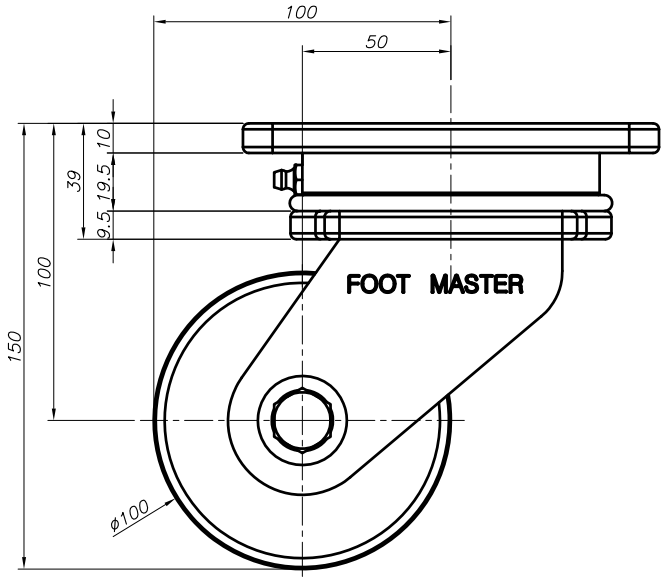

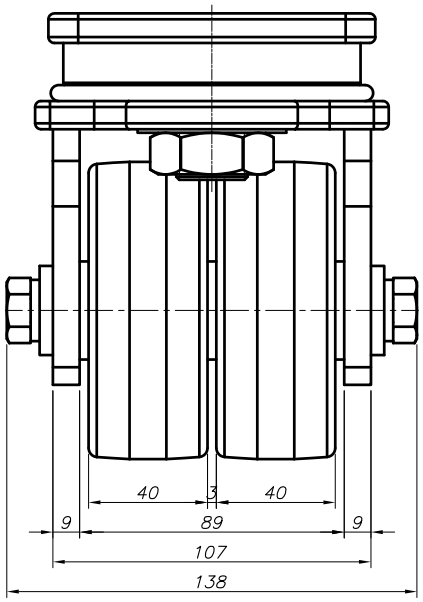

FOOT MASTER®	FOOMA®	G-DOK IND.	MODEL NAME	GXTT-100-ASF

A B C E F G

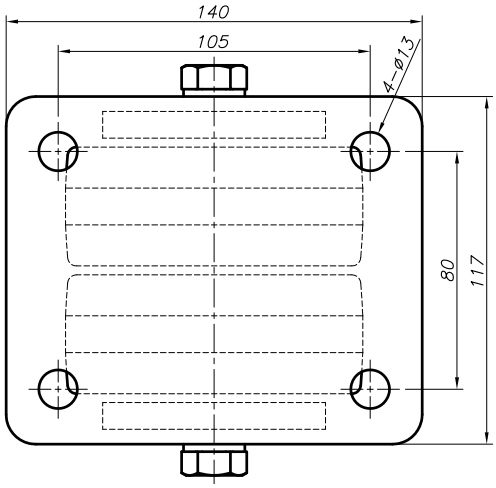

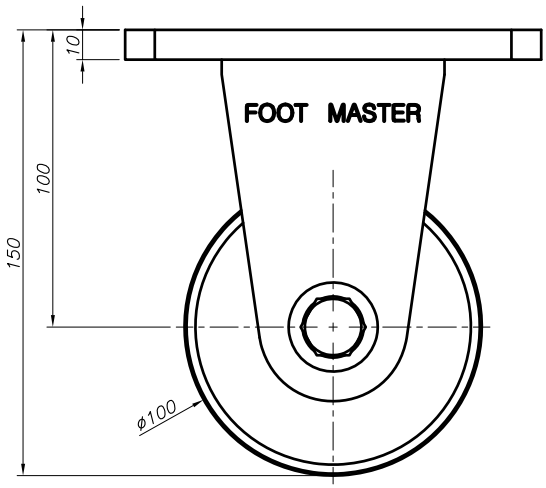

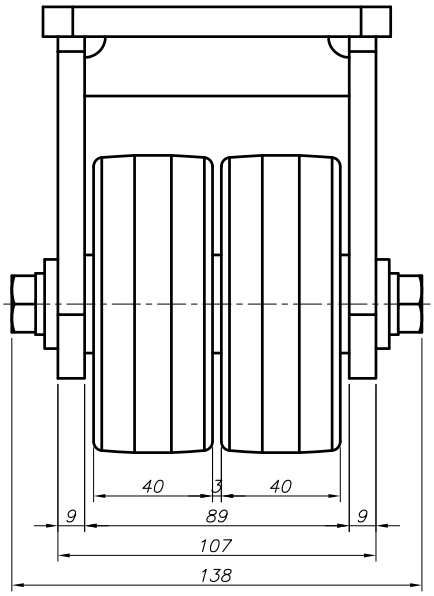

FOOT MASTER®	FOOMA®	G-DOK IND.	MODEL NAME	GXTT-100-ARF