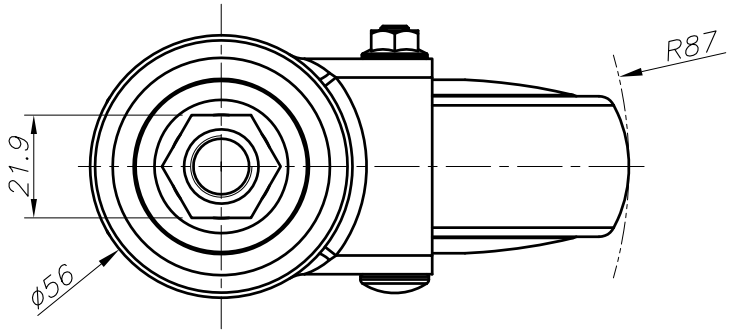

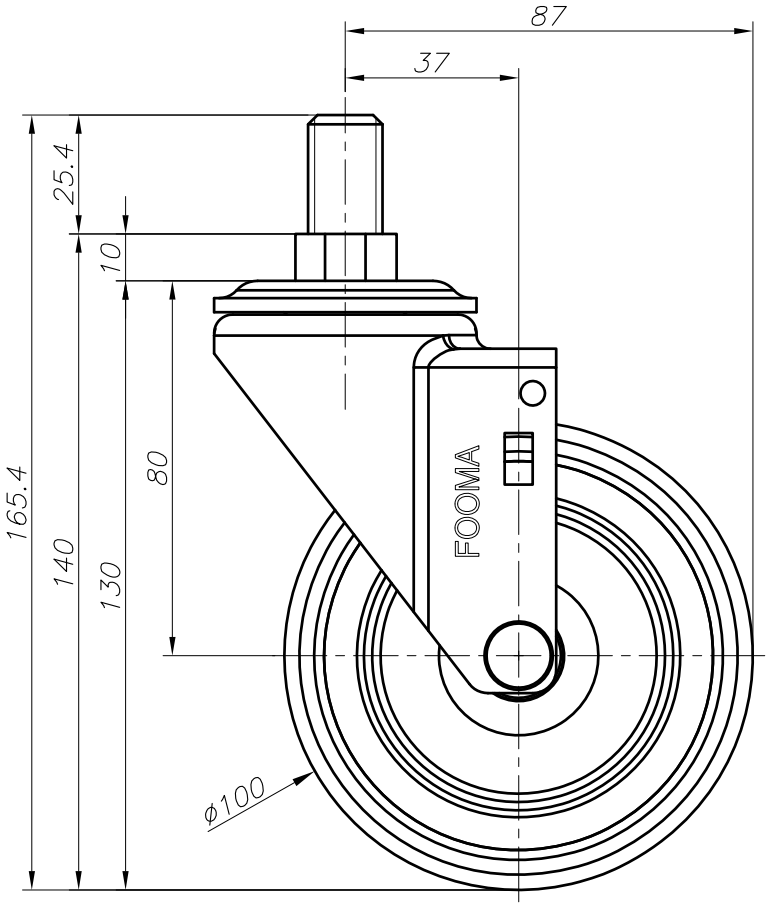

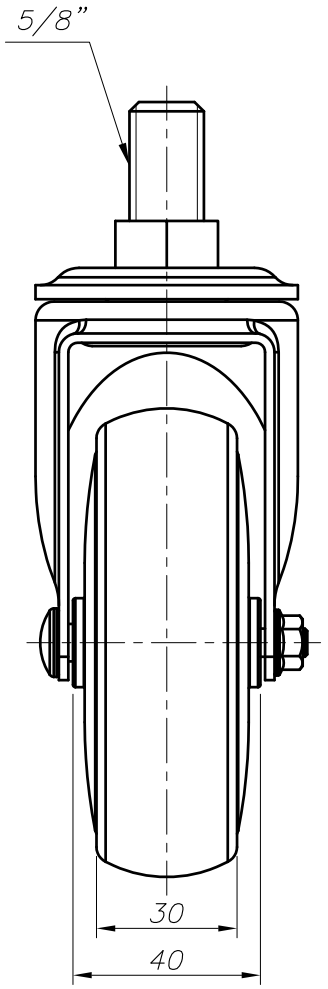

FOOT MASTER®	FOOMA®	G-DOK IND.	MODEL NAME	SGL-100-ASS

A B C E F G

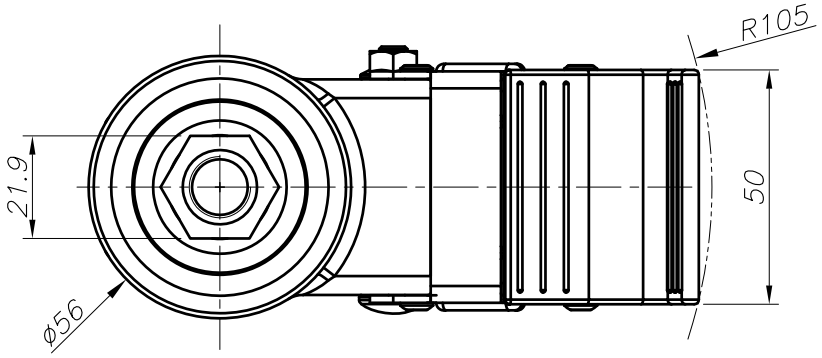

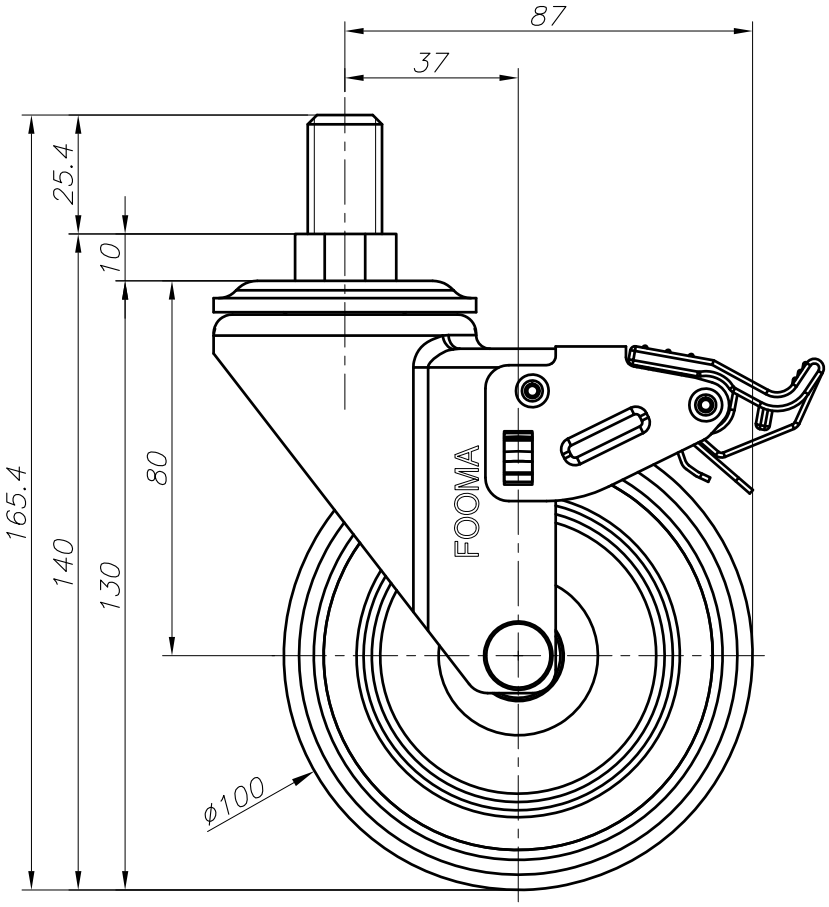

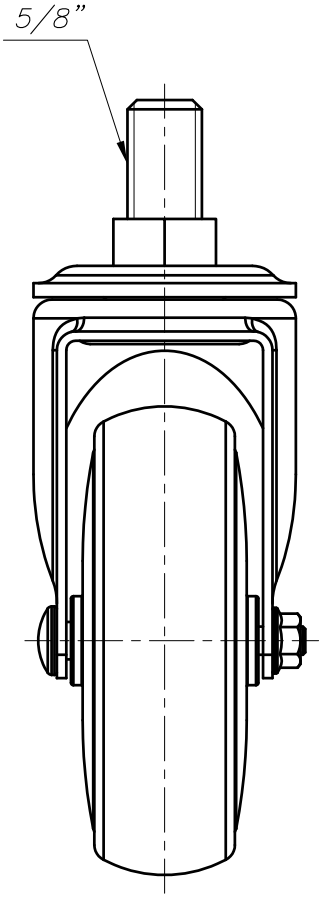

FOOT MASTER®	FOOMA®	G-DOK IND.	MODEL NAME	SGL-100-BSS